Work Order ID 52239

September 21, 2009 11:39:42 AM

Item ID: D3622-3
Revision ID: B-PRELIM
Item Name: Ball Stud

Accept

Setup Start
Stop

Start Date: 22/09/2009 **Start Qty:** 3.00
Required Date: 25/09/2009 **Req'd Qty:** 3.00
Reference: 09.09.21

Cust Item ID:
Customer:

POSITIVE RECALL

FOR ENGINEERING USE ONLY

PRELIMINARY ISSUE

Run Start
Stop

Approvals: **Process Plan:** _____ **Date:** _____ **Tooling:** _____ **Date:** _____
QC: _____ **Date:** _____ **SPC (Y/N):** _____ **Date:** _____

Draw Nbr	Revision Nbr
D3622	B-PRELIM

Sequence ID/ Work Center ID	Operation Description	Set Up/ Run Hours	Draw Number	Draw Rev.	Plan Code	Accept Qty	Reject Qty	Reject Number	Insp. Stamp
100		0.00							
Hardinge	**Memo**	0.00							
Hardinge CNC Lathe Small	Turn as per Dwg D3622 & Folio FA846 Dwg Rev: B Folio Rev: N/A Deburr as per Dwg	SN 09/09/22				3			
110	QC2- Inspect parts off machine FAI/FAIB	0.00 SN 09/09/22				3			
QC	**Memo**	0.00							
Quality Control									

Work Order ID 52239

September 21, 2009 11:39:42 AM

Item ID: D3622-3
Revision ID: B-PRELIM
Item Name: Ball Stud

Accept

Setup Start
Stop

Start Date: 22/09/2009 **Start Qty:** 3.00
Required Date: 25/09/2009 **Req'd Qty:** 3.00
Reference:

Cust Item ID:
Customer:

Run Start
Stop

Approvals: **Process Plan:** _____ **Date:** _____ **Tooling:** _____ **Date:** _____
QC: _____ **Date:** _____ **SPC (Y/N):** _____ **Date:** _____

Sequence ID/ Work Center ID	Operation Description	Set Up/ Run Hours	Draw Number	Draw Rev.	Plan Code	Accept Qty	Reject Qty	Reject Number	Insp. Stamp
120	QC8- Inspect parts - second check	0.00							
QC Quality Control	Memo	0.00 09-09-23				③			
130	Identify as per dwg & Stock Location:_____	0.00							
Packaging Packaging	Memo	0.00							
140	QC21- Final Inspection - Work Order Release	0.00							
QC Quality Control	Memo	0.00							

ENGINEERING APPROVAL 09/10/14

9/9/24 SY

U 09-09-28

Change to WO RD03 SEP

POSITIVE RECALL
EFFECT: 09-09-21 AUTH U
RELEASED _____ DATE _____

Picklist Print

September 21, 2009 11:39:42 AM

Work Order ID: 52239

Parent Item: D3622-3RevB-PRELIM

Parent Item Name: Ball Stud

Comments:

Start Date: 22/09/2009 **Required Date:** 25/09/2009

Start Qty: 3.00 **Required Qty:** 3.00

Component Item ID/ Item Name	Replacement Item ID	Mfg/ Purch	Bin Item	Primary Location	Last Location	Route Seq ID	Unit of Measure	Qty on Hand	Remaining Qty To Pick	Qty Issued	Date Issued	Status
M303H0.500 303 HEX BAR .500		Purchased	No			100	f	166.7820	0.3411			

Warehouse Location	Loc Qty	Loc Code
Main Warehouse		
MAT	166.782	
✓109778	141.762	
109846	25.02	

.65 pt SA 09/09/22

DART AEROSPACE LTD	Work Order:	52239
Description: Ball Stud	Part Number:	A3622-3
Inspection Dwg: A3622 , Rev: B		Page 1 of 1

FIRST ARTICLE INSPECTION CHECKLIST

[X] First Article [X] Prototype

Drawing Dimension	Tolerance	Actual Dimension	Accept	Reject	Method of Inspection	Comments
.58	±.030	.563	✓			
.50	±.030	.502	✓			
Ø.310	+.006 -.001	Ø.310	✓			
Ø.215	+.005 -.001	Ø.215	✓			
Ø.394	+.006 -.001	Ø.394	✓			
1.19	±.030	1.195	✓			
.630	±.010	.631	✓			
.563	±.010	.563	✓			
.478	±.010	.478	✓			
.125	±.010	.125	✓			
.313	±.010	.315	✓			
.155	±.010	.150	✓			
Major Ø	Max. .187 Min. .168	.187	✓			
M.O.W.	Max. .214 Min. .212	.2125	✓			

Measured by:		Audited by:		Prototype Approval:	
Date:	06/09/22	Date:	08-09-23	Date:	

Rev	Date	Change	Revised by	Approved
A		New Issue	KJ/JLM	

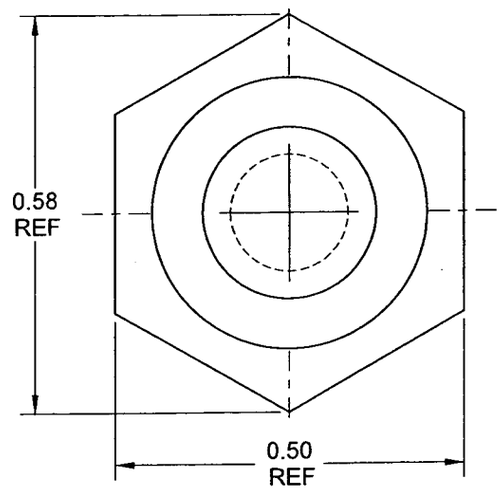

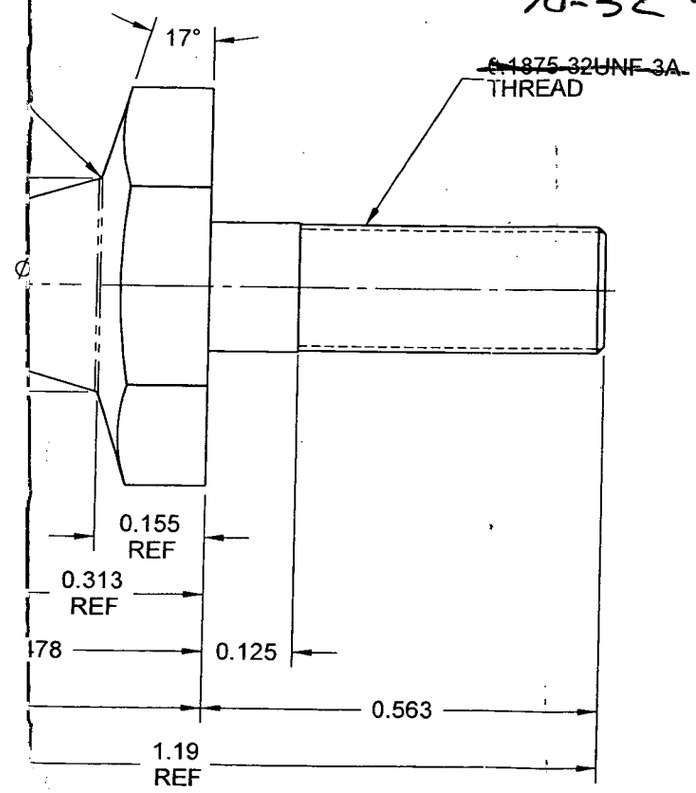

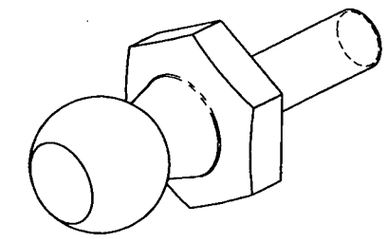

10-32 UNF

PRELIMINARY ISSUE
09/09/21

NOTES:
1) MATERIAL: AISI 303 HEX BAR
REF DART SPEC M303H0.500
2) FINISH: N/A
3) TOLERANCES: PER DART QSI 018 UNLESS OTHERWISE NOTED
4) UNITS: INCHES UNLESS OTHERWISE NOTED
5) BREAK SHARP EDGES: 0.005 TO 0.010 MAX
6) IDENTIFICATION: IDENTIFY WITH DART P/N "D3622-3" AND B/N USING FINE POINT PERMA
7) WEIGHT: 0.02 lbs

DESIGN		DART AEROSPACE LTD HAWKESBURY, ONTARIO, CANADA
DRAWN		
CHECKED		DRAWING NO. D3622 — REV. B — SHEET 2 OF 2
MFG. APPR.		
APPROVED		TITLE: BALL STUD — SCALE: NTS
DE APPR.		
DATE	09.09.18	

COPYRIGHT © 2009 BY DART AEROSPACE LTD
THIS DOCUMENT IS PRIVATE AND CONFIDENTIAL AND IS SUPPLIED ON THE EXPRESS CONDITION THAT IT IS NOT TO BE USED FOR ANY PURPOSE OR COPIED OR COMMUNICATED TO ANY OTHER PERSON WITHOUT WRITTEN PERMISSION FROM DART AEROSPACE LTD.

Date: 8/11/03 Batch No: M109778

Supplier: Metaux solution Dart P/O: 7447

Packing Slip: Yes ✓ No ___
Invoice: Yes ___ No ✓
Receipt: Cash ___ Cr ✓

Release Note Attached: Yes ___ No ___ N/A ✓
Waybill Attached: Yes ✓ No ✓
Shipment Complete: Yes ✓ No ___ N/A ___
QC6 Inspection 08/11/03 N/A ✓
Work Order ___ N/A ✓

Discrepancies

Part Number	Description	Quantity Ordered	Quantity Received	Quantity Returned	Quantity Short	Comments

Initials of receiver (if shipment OK) Level 12

Production/Admin:
Date 08/11/05
Received/Costing BCP 9350
Initial CZ

Location ___

H:\FORMS\Purchasing\approved purch\RECREPORT Rev D

4) Regist :

Subtotal :	1 568.76
TPS :	78.44
Total :	1 647.20

TPS : 140667742RT - TVQ : 1017841196TQ0001

DART

Purchase Order

FAXED 08/10/24

Date	Page
Oct 24, 2008	1

Purchase Order Number
PO00007447

Dart Aerospace Ltd
1270 Aberdeen St
Hawksbury, Ontario K6A 1K7
Phone: (613)632-9577
Fax: (613)632-1053

Vendor Address:
Metaux Solutions
2108, 32e Avenue
Lachine, QC H8T 3H7
Phone (800) 558-8858
Fax (514) 633-8044

Ship To:
Main Finished Goods Location
Dart Aerospace Ltd
1270 Aberdeen St
Hawksbury, Ontario K6A 1K7

Reference	Contact	Vendor Number	PO Date	Terms	Ship Via	Expected Arrival
		VC-MET002	Oct 24, 2008	N30	yours	Oct 31, 2008

Qty. Ordered	Item Number	Description	Expected Arrival	Drop-Ship	Unit Cost	UOM	Extended Price
204.0000	M303H0500	303 HEX BAR .500 Comments: MATERIAL: AISI 303 HEX BAR NOTE: AISI 304/316 NOT ACCEPTABLE	31/10/2008	No	7.690000	f	1,568.76

/ c 11/10/08

MATERIAL CERTIFICATION REQ'D UPON DELIVERY

RUSH

Comments:
please fax packing slip + material cert
thanks
Chantal.

Tax Summary:

GST	78.44
GSTME	0.00
GSTND	0.00

Entered By: CL CLAVOIE

Approved By: CL

Less: included tax	0.00
Subtotal	1,568.76
Total tax	78.44
Total purchase order in CAD Dollars	1,647.20

OUTO KUMPU

Certificate of Test

****
* CERTIFICATION *
****

HEAT E50377 ORDER 0496191/001 SON 28063C BOL 0149304 TAG 1851525 05/07/08

SHIP TO:

Dart Aerospace LTD
P.O 7447
P/S 56842

YOUR ORDER & DATE

01-40367	5/07/08	CUST# CASTLE01	CUST TAG#IAC 4901

ITEM DESCRIPTION

GRADE 303
Size 303 CDA HEX BAR 1/2 STD
Ship Condition A

Solution 04

Country of Melt: BRI
Country of Mfg.: USA
NAFTA Country of Origin is Country of Melt

Total Bundles 1 SON Weight 2200

SPECIFICATIONS

MFG TO FINISHED BAR IN THE USA FROM BILLETS IMPORTED FROM BRITAIN
AMS 5640U TYPE I
ASTM A582 05
SOLUTION ANNEALED CONDITION
AISI-303,UNS S30300,SAE30303
UNS S30300, AISI 303
AM CASTLE 3303-11 R27
ASTM A484 06B
DIN 50049/EN 10204 3.1B
FREE OF CONT. CARBIDE NETWORK
NO WELD REPAIR
FREE OF MERCURY CONTAMINATION

MECHANICAL & OTHER TESTS

Test Condition	A
Hardness as shipped	230 HBW
Hardness as shipped	97 HRBS
Hardness as converted from tensile	
Grain size	8.5
Micro	OK
Intergranular corrosion	OK

Tensile strength,KSI (MPa)	111.0	(765)
0.2% Yield Strength,KSI(MPa)	98.5	(679)
Elongation % in 4D	37.0	
Reduction of area %	55.0	

CHEMICAL COMPOSITION

Carbon	(C)	.043	Manganese	(Mn)	1.740
Phosphorus	(P)	.028	Sulphur	(S)	.338
Silicon	(Si)	.430	Chromium	(Cr)	17.250
Nickel	(Ni)	8.660	Cobalt	(Co)	.119
Copper	(Cu)	.422	Moly	(Mo)	.450
Nitrogen	(N)	.051	Columbium	(Cb)	.001
Titanium	(Ti)	.003	Aluminum	(Al)	.003
Tin	(Sn)	.012	Boron	(B)	.001
Tantalum	(Ta)	.002	Vanadium	(V)	.070
Columbium/ Tantalum	(Cb+Ta)	.003			
Iron	(Fe)	Balance			
Melt Practice		EAF			
Refining Practice		AOD			
De-long Ferrite		2.0			

DATE RCVD 5/9/08
IAC 4901
APPROVED BY

Knowingly & willfully falsifying or concealing a material act on this form, or making false, fictitious or fraudulent statements or representations herein could constitute a felony punishable under federal statutes.

We hereby certify that the test results shown in this report are correct and accurate as contained in the records of the company and are in compliance with the specifications, codes, and standards listed above.

M.F. Marcanio, Quality Manager

M.F. Marcanio

Outokumpu Stainless Bar, Inc.
3049 Crenshaw Pkwy.
Richburg, SC 29729

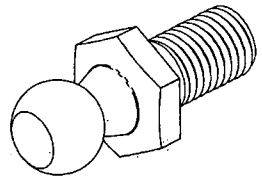

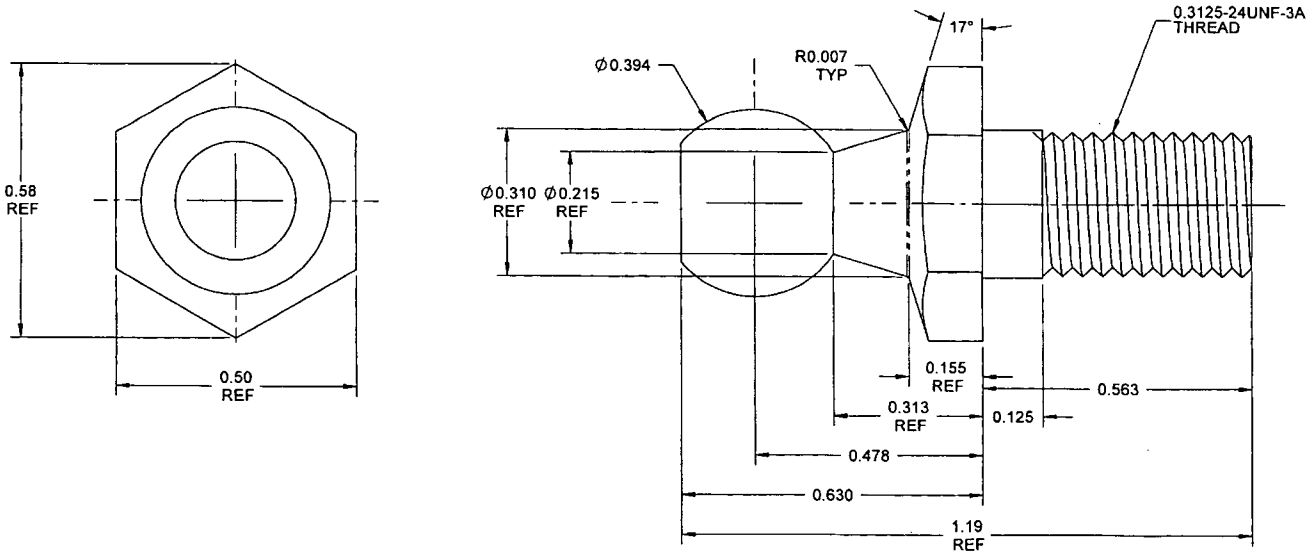

52239

RELEASED
2009 -10- 08

D3622-1 BALL STUD

REV.	DESCRIPTION	BY	DATE
B	ADD -3 (SHEET 2)		09.09.18
A	NEW ISSUE	MB	07.04.13

DESIGN	
DRAWN	
CHECKED	
MFG. APPR.	
APPROVED	
DE APPR.	
DATE	09.09.18

DART AEROSPACE LTD
HAWKESBURY, ONTARIO, CANADA

DRAWING NO. D3622 — REV. B — SHEET 1 OF 2

TITLE: BALL STUD — SCALE: NTS

COPYRIGHT © 2009 BY DART AEROSPACE LTD
THIS DOCUMENT IS PRIVATE AND CONFIDENTIAL AND IS SUPPLIED ON THE EXPRESS CONDITION THAT IT IS NOT TO BE USED FOR ANY PURPOSE OR COPIED OR COMMUNICATED TO ANY OTHER PERSON WITHOUT WRITTEN PERMISSION FROM DART AEROSPACE LTD

NOTES:
1) MATERIAL: AISI 303 HEX BAR
REF DART SPEC M303H0.500
2) FINISH: N/A
3) TOLERANCES: PER DART QSI 018 UNLESS OTHERWISE NOTED
4) UNITS: INCHES UNLESS OTHERWISE NOTED
5) BREAK SHARP EDGES: 0.005 TO 0.010 MAX
6) IDENTIFICATION: IDENTIFY WITH DART P/N "D3622-1" AND B/N USING FINE POINT PERMANENT INK MARKER
7) WEIGHT: 0.03 lbs

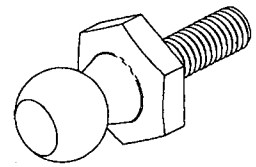

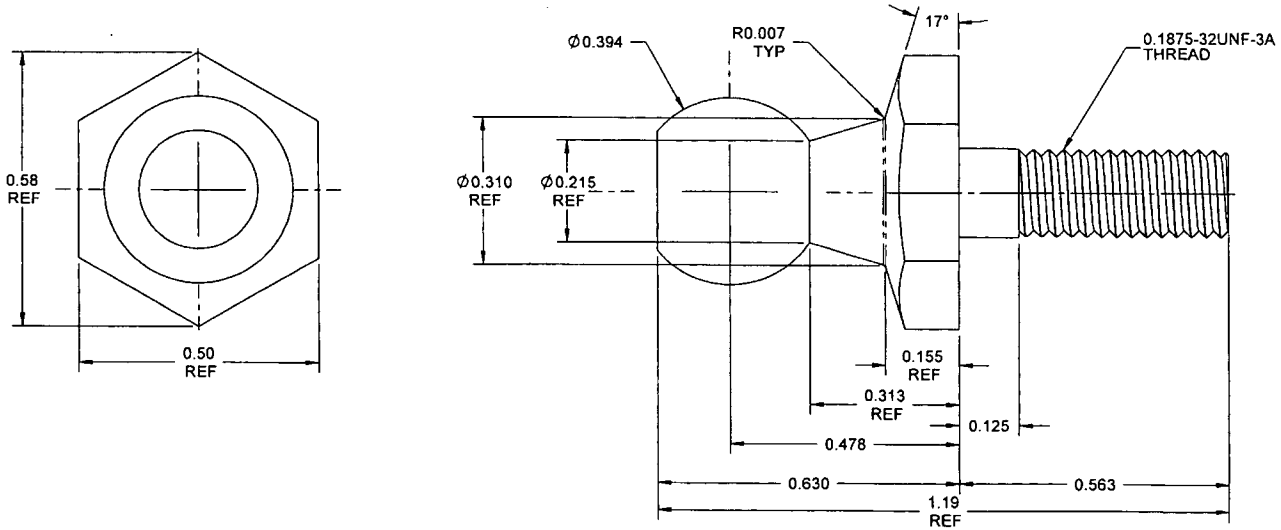

52239

RELEASED
2009 -10- 08

(B) D3622-3 BALL STUD

NOTES:
1) MATERIAL: AISI 303 HEX BAR
REF DART SPEC M303H0.500
2) FINISH: N/A
3) TOLERANCES: PER DART QSI 018 UNLESS OTHERWISE NOTED
4) UNITS: INCHES UNLESS OTHERWISE NOTED
5) BREAK SHARP EDGES: 0.005 TO 0.010 MAX
6) IDENTIFICATION: IDENTIFY WITH DART P/N "D3622-3" AND B/N USING FINE POINT PERMANENT INK MARKER
7) WEIGHT: 0.03 lbs

DESIGN		DART AEROSPACE LTD HAWKESBURY, ONTARIO, CANADA
DRAWN		
CHECKED		DRAWING NO. D3622 — REV. B — SHEET 2 OF 2
MFG. APPR.		
APPROVED		TITLE: BALL STUD — SCALE: NTS
DE APPR.		
DATE	09.09.18	

COPYRIGHT © 2009 BY DART AEROSPACE LTD
THIS DOCUMENT IS PRIVATE AND CONFIDENTIAL AND IS SUPPLIED ON THE EXPRESS CONDITION THAT IT IS NOT TO BE USED FOR ANY PURPOSE OR COPIED OR COMMUNICATED TO ANY OTHER PERSON WITHOUT WRITTEN PERMISSION FROM DART AEROSPACE LTD.

ENGINEERING CHANGE NOTICE

DART AEROSPACE LTD

Date:	09.09.21	Job No.:	P2010009	ADR Yes/No:	No	ADR Date:	ECN #: 09- 673P
Product No.:	D350-600/D130-780/D412-698			Created By:	HS	Approved By:	
Product Name:	AS 350 Spacepod/Hinge Door kits			Checked By:		General Manager Approval:	

Distribution	Reqd	Resp	Initial / Date
Production Manager	Y	LL	09.09.21
Production Engineering Coord	Y	EC	09/09/21
Production Document Control	N	~~JLB~~	
Customer Technical Support	N	~~DS~~	

Distribution	Reqd	Resp	Initial / Date
DQA / QA Coord	N		
QC Coordinator	N		
Marketing	N		
Customer Order Processing	N		

Reason for Change:
Prelimin Release for parts for testing

Documents Affected:
D3622 Rev. B
D3991 Rev. A
D3992 Rev. A

PARTS MUST COMPLY [X] **PREVIOUS PARTS SATISFACTORY** [ ]

#	Quality Assurance Actions	Reqd	Resp	Notes	Complete
1	Notify Previous Customers	N			
2	Notify Eurocopter France	N			
3					

#	Engineering Actions	Reqd	Resp	Notes	Complete
4	Required Documents/Drawings Under Review	N			
5	Update Product Compatability Matrix	N			
6	Create Eurocopter Form (FEE)	N			
7	Notify TC / FAA of Change	N			

#	Document Control Actions	Reqd	Resp	Notes	Complete
8	Move Electronic Files	N			
9	Update Blue/Pink/DSI Folder and Electronic Files	N			
10	Update Controlled PDF Files	N			
11	Update Master Document List (MDL)	N			
12	Update Document Record (DR)	N			
13	Update Product Development Summary	N			
14	Update QSI 021 and/or STC Approval List	N			
15	Update Parts / STC Database	Y	KJ		09.09.21
16	Update / Verify ARC Database	N			
17	Create / Update Change Record Form	N			
18	Create / Update PPP's	N			
19	Update Document Control Database / Laminated Dwgs	N			
20	Update Grey Project Binder	N			
21	Update D-Part/M-Drawing/DSI/DEO Master Binders	N			
22					
23					

Description / Action:
- Parts required for testing, to be sent to Calgary on or before 09.09.25
- Quantity required; D3622-3 (2), D3991-1 (1), D3991-3 (1), D3992-1 (1), D3992-3 (1)
- create estimates for D3622-3, D3991-1, D3991-3, D3992-1, D3992-3
- AS PARTS WILL BE USED FOR TESTING NO FINISHING IS REQUIRED. NO MAT'L CERTS.

ECN Verified & Complete: Date: 09/09/21